Product Specification

Ningbo East Electronics Limited
NO. 88 East Jinhui Road,Yinzhou Ningbo 315100,P.R.China
http://www.east-mingtao.com

Product Name:	Piezo Buzzer
Part Number:	EFM-236KL
Version:	1.02
Date:	2019-8-19
Note:	

East is an ISO 9001 , IATF16949 and ISO 14001Certified Company

Revision History

Rev.	Description	Author/Date	Checked By	Approver
1.02	Quality management system revised	汤礼东 2019-8-19	吕文斌	王建成
1.01	Quality Certificate Symbol revised	吕文斌 2015-1-31	汤礼东	王建成
1.0	Released	汤礼东 2011-11-17	张春雷	王建成

1. Part Number EFM-236KL

2. Dimension Drawing (Unit: mm)

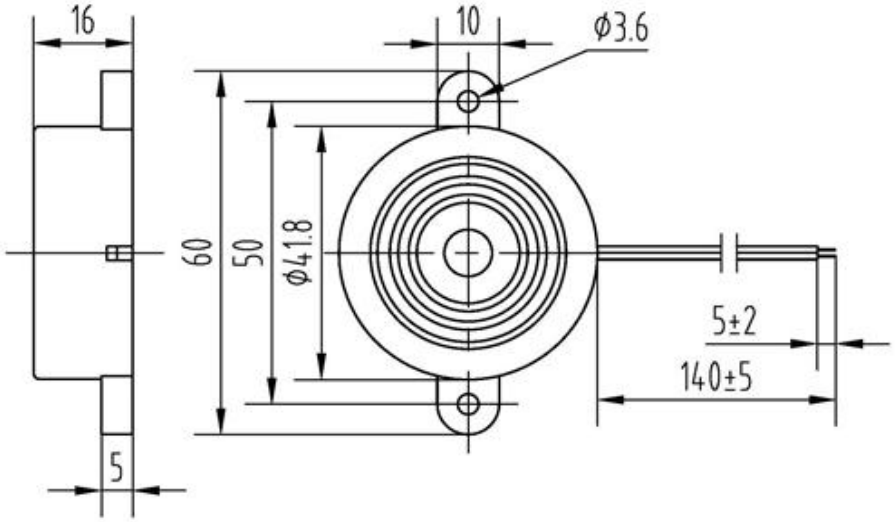

3.Specification

No.	Item	Specification
3-1	Min. Sound Pressure Level	100dB/12V_{DC}/30cm
3-2	Rate Voltage	12V_{DC}
3-3	Operating Voltage	3~20V_{DC}
3-4	Max. Consumption	15mA/12V_{DC}
3-5	Oscillating Frequency	2.9± 0.5kHz
3-6	Tone Nature	Fast Pulse
3-7	Operating Temperature	-20~+70ºC
3-8	Case Material /Color	ABS/Black
3-9	Weight	14.4g
3-10	Wire Standard	UL1095-26AWG

NOTE:
1. Fast Pulse f=2.5Hz±20%.
2. Test should be made under the conditions of room temperature (20±10℃), normal humidity (60±20%) and normal atmospheric pressure. In this case, however, that the judgment is questionable, the test conditions are to be changed to room temperature 20±2℃, relative humidity 60~70% and normal atmospheric pressure.

4.Typical Frequency Response Curve

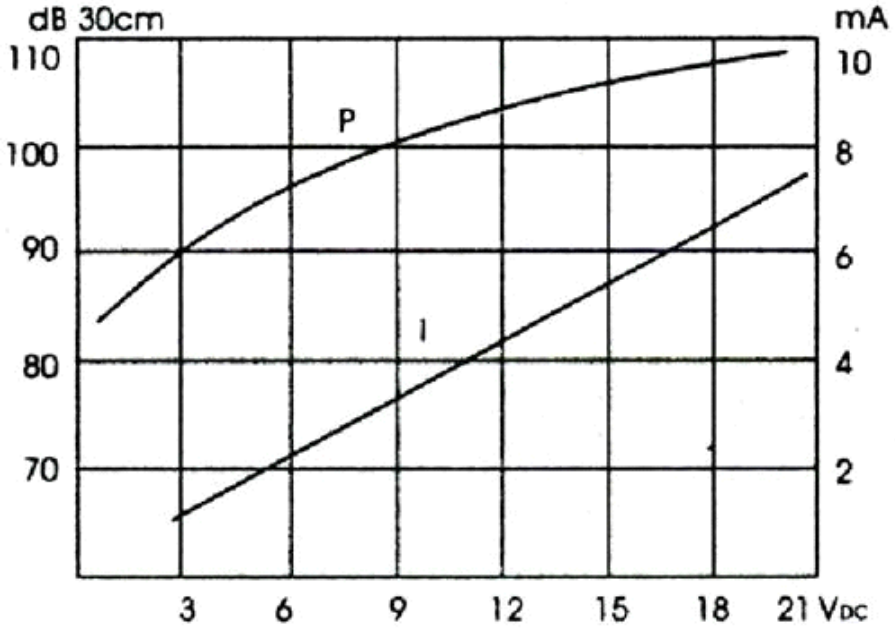

Note: Distance 30 cm

5. Reliability Test

No.	Item	Method of Test	Tolerance after Testing
5-1	Operating Temperature	-20~+70℃	Sound pressure level initial value ±10dB Max. consumption value ±20% Oscillating Frequency value ±20%
5-2	Storage in high temperature	Storage in +70℃ test box 96 hours then exposed to the room temperature for 2 hours	
5-3	Storage in low temperature	Storage in -20℃ test box 96 hours then exposed to the room temperature for 2 hours	
5-4	Life test in the room temperature	Operate the product continuously 5 seconds on 5 seconds off 300 hours at rated voltage	
5-5	Temperature / humidity cycle test	Storage in +40℃, 93±3%RH test box 96 hours then exposed to the room temperature for 2 hours	
5-6	Temperature (high and low) cycle test	Conduct the test for 5 cycles without applying power then expose to the room temperature for 2 hours.(See Figure 5-6)	
5-7	Vibration test	Conduct the test for the directions of X Y and Z for 0.5 hour each (total 1.5 hours). To-and Fri sweep time(from 10 to 55Hz and then 55 to 10) under single amplitude of 0.75mm is 3 minute, then expose to the room temperature for 2 hours	
5-8	Drop test	Drop a product naturally from the height of 700mm onto the surface of 100mm thick wooden board. Two directions: upper and side of the product are to be applied for this drop test once respectively	

Figure 5-6

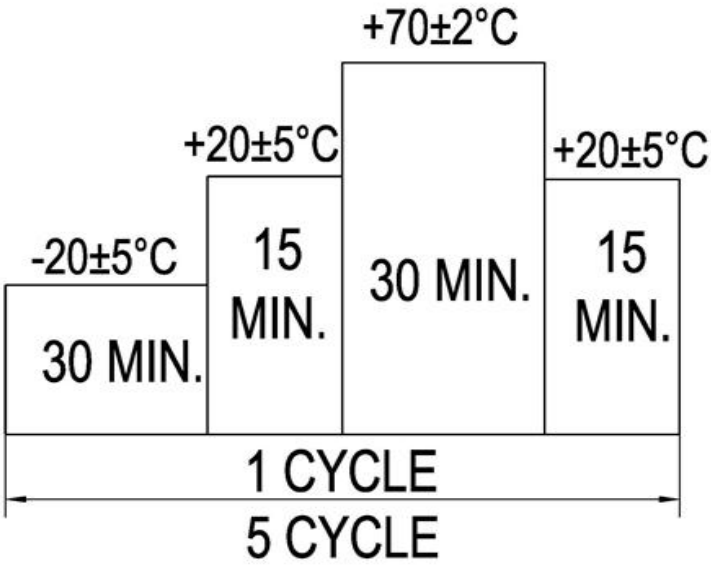

6. Electrical Testing Method

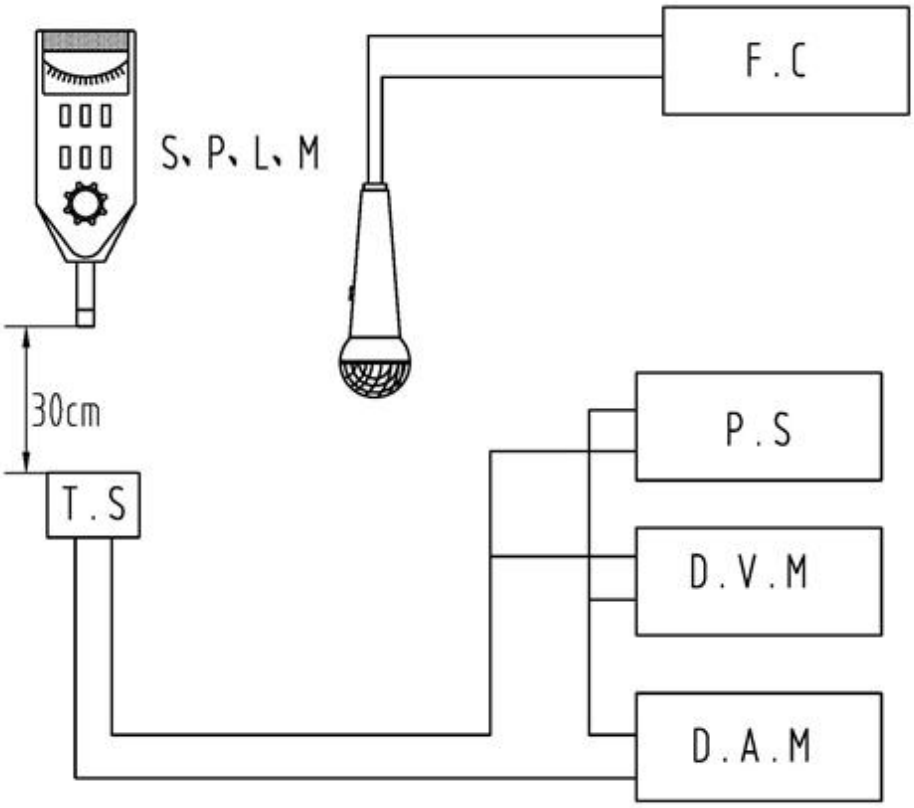

S.P.L.M	Sound Pressure Level Meter
T.S	Testing Sample
F.C	Frequency Counter
P.S	Power Supply
D.V.M	DC Voltage Meter
D.A.M	DC Ampere Meter

7. Packing Information

Packing: 850 pcs per export carton
Carton Size: 47× 30.5× 25 cm
G. Weight: 14.6 kgs N. Weight: 12.2 kgs