Product Specification

Ningbo East Electronics Limited
NO. 88 East Jinhui Road,Yinzhou Ningbo 315100,P.R.China
http://www.east-mingtao.com

Product Name:	SMD Magnetic Transducer
Part Number:	SFM-9527G01
Version:	1.02
Date:	2019-11-6
Note:	

East is an ISO 9001 , IATF16949 and ISO 14001Certified Company

Revision History

Rev.	Description	Author/Date	Checked By	Approver
1.02	Quality management system revised	汤礼东 2019-11-6	吕文斌	王建成
1.01	Add Coil Impedance	汤礼东 2014-10-29	李建华	王建成
1.0	Released	汤礼东 2012-4-6	陈启旺	王建成

1. Part Number SFM-9527G01

2. Dimension Drawing (Unit: mm)

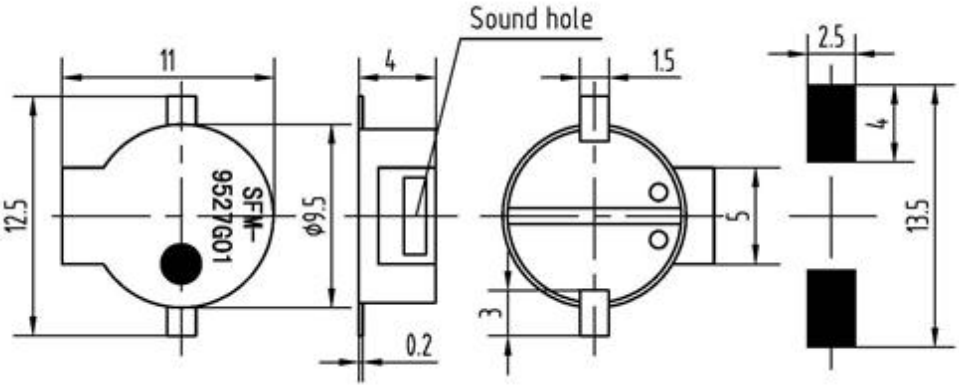

SFM-TERMINAL VERSION RECOMMENDED SMD FOOT PATTERN

Solder paste thickness is not below 0.2mm

3.Specification

No.	Item	Specification
3-1	Min. Sound Pressure Level	80dB/2731Hz/1.5V /10cm
3-2	Rated Voltage	1.5V
3-3	Operating Voltage	1~2V
3-4	Max. Consumption (At $1.5V_{DC}$)	80mA/2731Hz/3Vp-p square wave
3-5	Resonant Frequency	2731Hz
3-6	Coil Resistance	5.5±2Ω
3-7	Coil Impedance	9.5Ω
3-8	Operating Temperature	-20~+85℃
3-9	Storage Temperature	-20~+85℃
3-10	Case Material/Color	PPS/Black
3-11	Weight	0.8g
3-12	Pin Strength	More than 10N

NOTES:

1、Value applying rated voltage(resonant frequency,1/2duty,square wave)

2、Test should be made under the conditions of room temperature (20±10℃), normal humidity (60±20%) and normal atmospheric pressure. In this case, however, that the judgment is questionable, the test conditions are to be changed to room temperature 20±2℃, relative humidity 60~70% and normal atmospheric pressure

4.Typical Frequency Response Curve

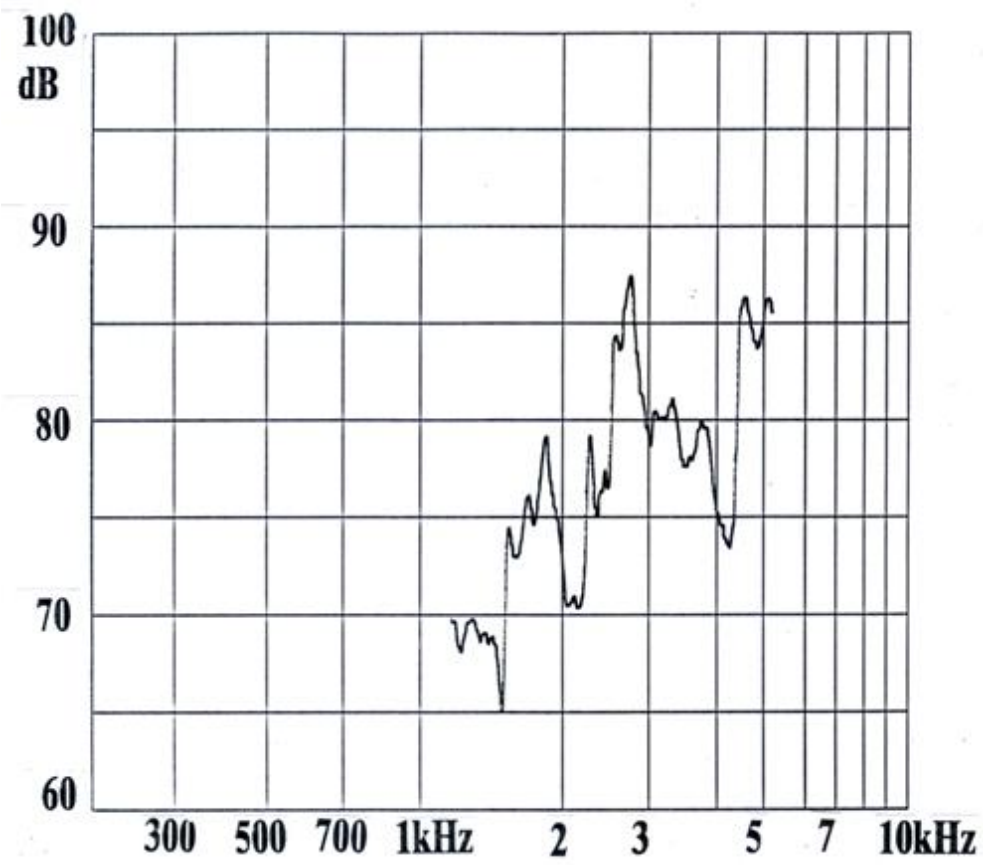

Note: Input Voltage 1.5V
Distance 10 cm

5. Reliability Test

No.	Item	Method of Test	Tolerance after Testing
5-1	Operating Temperature	-20~+85℃	Sound pressure level initial value ±10dB Max. consumption value ±20%
5-2	Storage in high temperature	Storage in +85℃ test box 96 hours then exposed to the room temperature for 2 hours	
5-3	Storage in low temperature	Storage in -20℃ test box 96 hours then exposed to the room temperature for 2 hours	
5-4	Life test in the room temperature	Operate the product continuously 5 seconds on 5 seconds off 300 hours at rated voltage	
5-5	Temperature / humidity cycle test	Storage in +40℃, 93±3%RH test box 96 hours then exposed to the room temperature for 2 hours	

5-6	Temperature (high and low) cycle test	Conduct the test for 5 cycles without applying power then expose to the room temperature for 2 hours.(See Figure 5-6)	
5-7	Vibration test	Conduct the test for the directions of X Y and Z for 0.5 hour each (total 1.5 hours). To-and Fri sweep time(from 10 to 55Hz and then 55 to 10) under single amplitude of 0.75mm is 3 minute, then expose to the room temperature for 2 hours	
5-8	Drop test	Drop a product naturally from the height of 700mm onto the surface of 100mm thick wooden board. Two directions: upper and side of the product are to be applied for this drop test once respectively	
5-9	Reflow soldering heat resistance	a) Pre-heating conditions shall be +140℃ to 160℃ for 160 to 200 seconds. (See Figure5-9) b) Heating conditions shall be within 60 seconds at +200℃ min., but peak temperature shall be lower than +260℃. (See Figure 5-9)	
5-10	Test of soldering	Dip the connecting pins in soldering at 230±5℃ for 3±0.5 seconds	Solder shall be attached around over 95% of the dipped portion
NOTE: The pins are allowed to deform after drop test.			

Figure 5-6

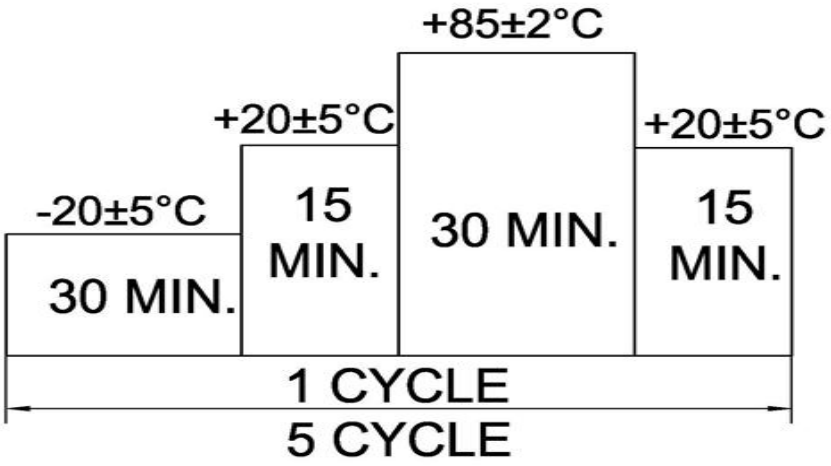

Figure 5-9

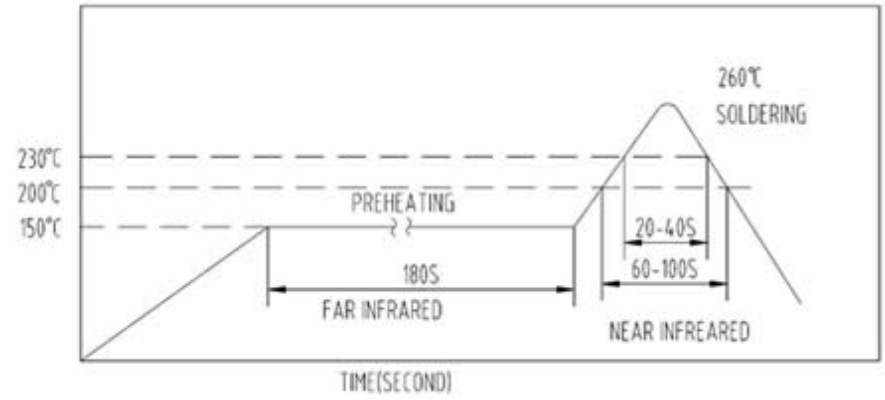

6. Electrical Testing Method

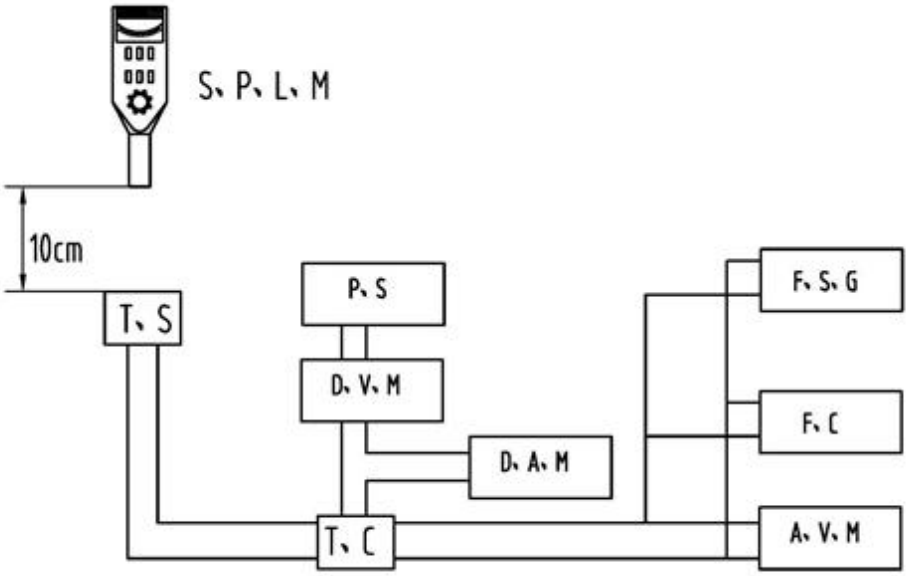

S.P.L.M	Sound Pressure Level Meter
T.S	Testing Sample
F.C	Frequency Counter
T.C	Test Circuit
F.S.G	Frequency Signal Generator
A.V.M	AC Voltage Meter
P.S	Power Supply
D.V.M	DC Voltage Meter
D.A.M	DC Ampere Meter

TEST CIRCUIT:

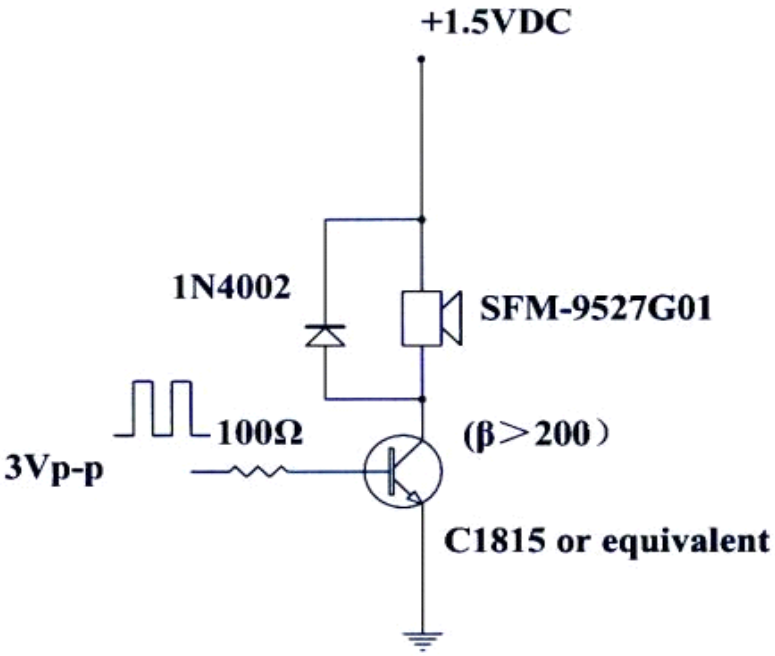

7. Packing Information

No.	Item	Description
7-1	Tape type information	a) The design for such tape packing was executed under standard IEC - 286-3 b) The material of the tape is polystyrene in black color. Detailed dimensions are as below: (See Figure7-1)
7-2	Dimensions of the rolling plate	a) The material of the rolling plate is paper. b) The dimensions of the rolling plate are as below(See Figure7-2)
7-3	Packing dimensions and quantity	a) The rolling plate is put into a 340X335X35mm inner packing box and is packed with 650pcs of transducer per plate. b) The dimension of the outer carton is 400X 350X 350mm containing 10 inner boxes with a total quantity of 6500 pcs of transducer. c) The total gross weight per carton is 8.0Kgs, while net weight is 5.2Kgs.

Figure 7-1(Unit:mm)

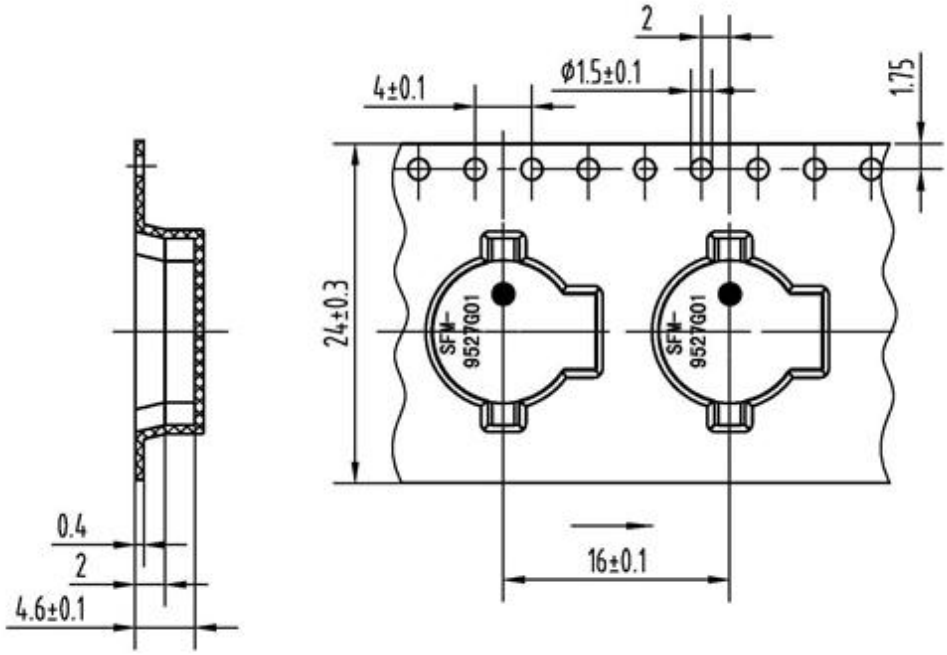
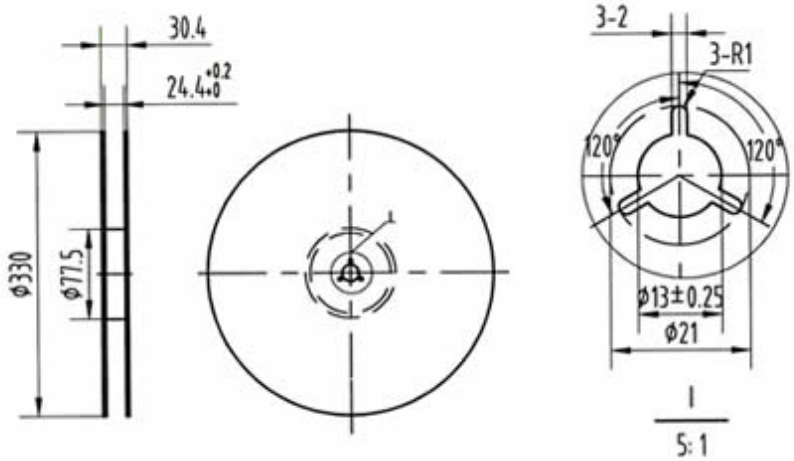
Figure 7-2(Unit:mm)